nextdesk™ Terra Pro™
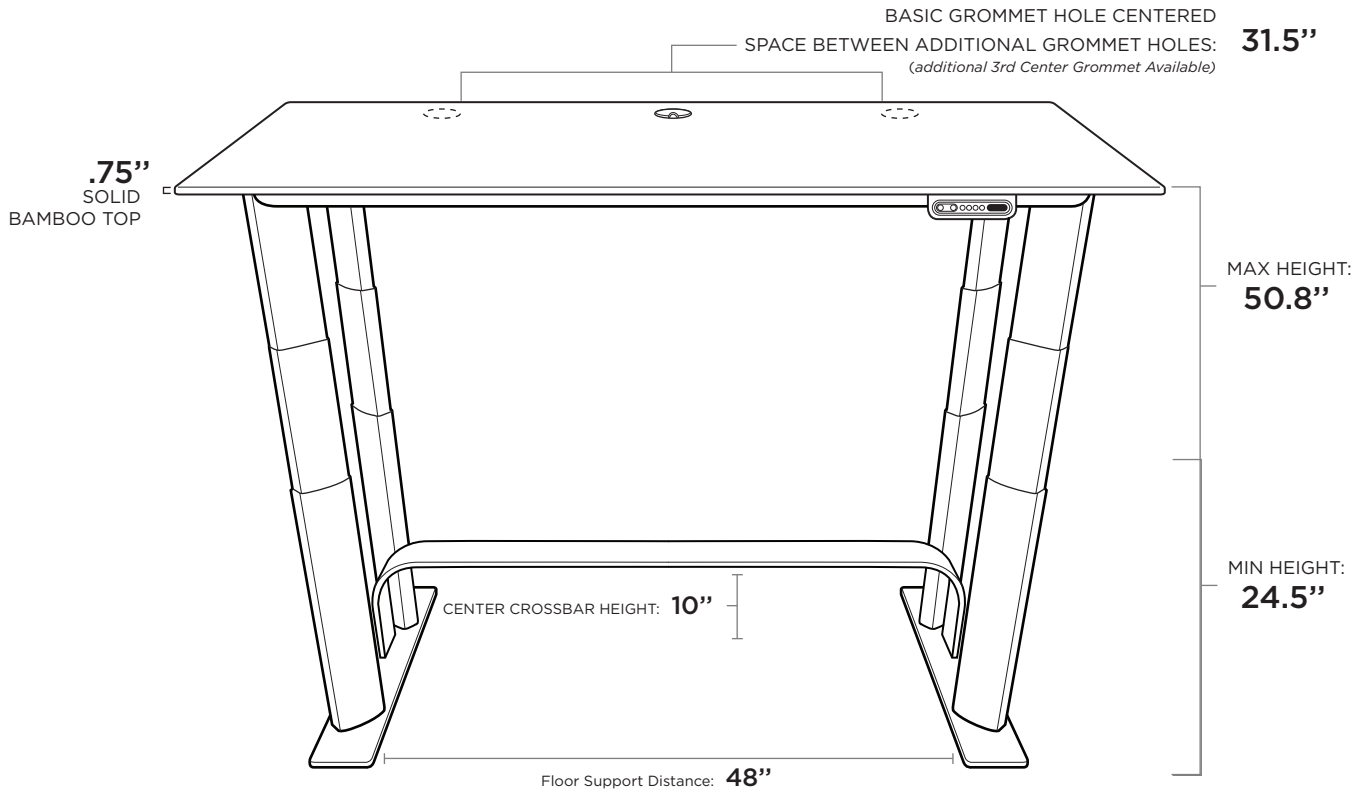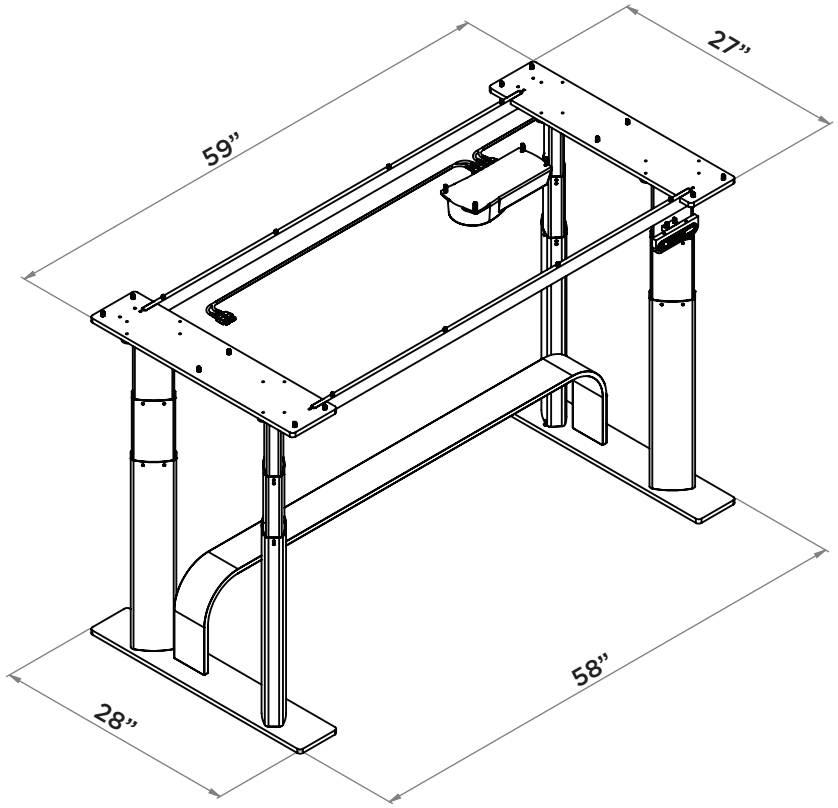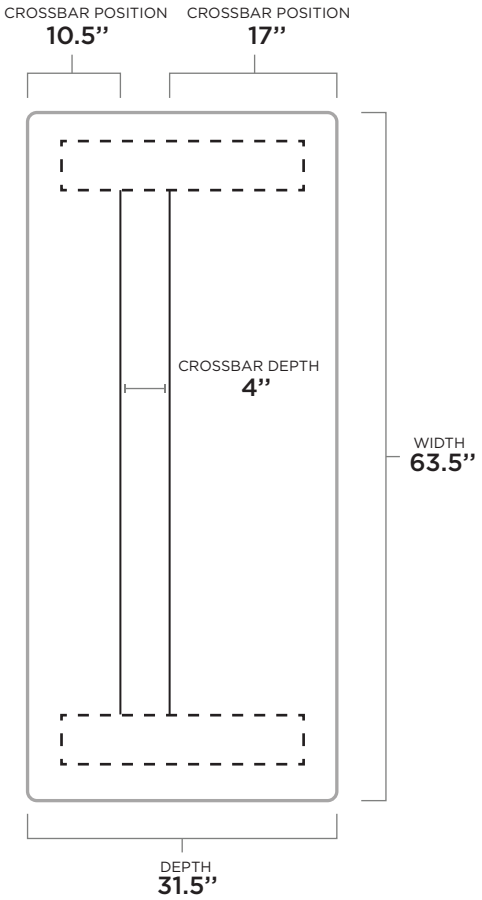
Standard - Technical Drawing